Castel
Italian technology

Product Code

2028EX/3A602

PWM Expansion Valve
3/8"x1/2"ODS Seat 02 - 220/230V
PS = 50 bar

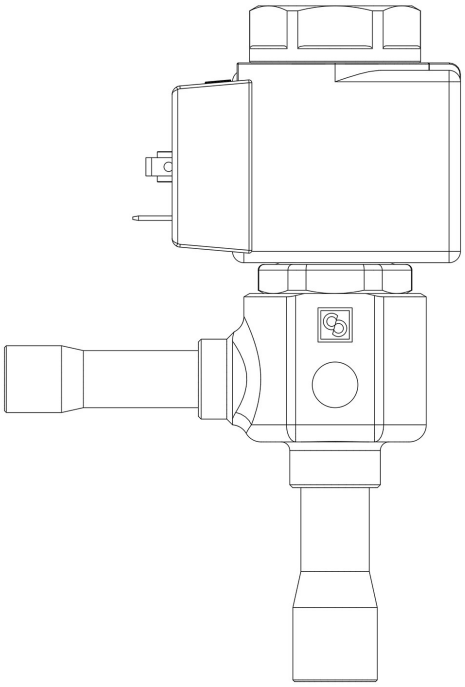

POLYHEDRA

Product use

Solenoid expansion valves with the ?EX? suffix are compliant with the ESR of Directive 2014/34/EU ? ATEX. This equipment is suitable for use on refrigeration systems located in areas classified as ?Zone 2? risk of explosion, according to the definition in Annex I of Directive 1999/92/EC.
Accessories for use with the following ASHRAE 34:2019 refrigerants, Class A1, A2L, or A3:
HFC (R134A, R32, R404A, R407C, R410A, R507)
HFO (R1234YF, R1234ZE)
HFO + HFC (R448A, R449A, R450A, R452A, R452B, R454A,
R454B, R454C, R455A, R513A, R515A, R515B)
HC (R290, R600, R600A, R1270)

These valves are only sold in the model with the ATEX certified coil (A6 suffix), with 9 nozzles assembled for an increasing output from 2 to 36 kW with R290.

Product Details

Orifice type	02
Connections In Ø [in.]	3/8"
Connections In Ø [mm]	-
Out Ø [in.]	1/2"
Out Ø [mm]	-
Kv [m³/h]	0,017
PS [bar]	50
TS [°C] min.	-40

Castel non si assume alcuna responsabilità per eventuali errori nei cataloghi, opuscoli e altro materiale stampato o indicato nel sito Castel.it. Castel si riserva il diritto di modificare i propri prodotti senza preavviso. Tutti i marchi in questo materiale sono di proprietà di Castel. Tutti i diritti riservati.
Castel assumes no responsibility for any errors in catalogs, brochures and other material printed or indicated on the Castel.it website. Castel reserves the right to modify its products without notice. All trademarks in this material are the property of Castel. All rights reserved.

TS [°C] max.	+100
Package pcs.	15

Notes where expressly stated

for rated capacities see table of the orifice assemblies

Castel non si assume alcuna responsabilità per eventuali errori nei cataloghi, opuscoli e altro materiale stampato o indicato nel sito Castel.it. Castel si riserva il diritto di modificare i propri prodotti senza preavviso. Tutti i marchi in questo materiale sono di proprietà di Castel. Tutti i diritti riservati.
Castel assumes no responsibility for any errors in catalogs, brochures and other material printed or indicated on the Castel.it website. Castel reserves the right to modify its products without notice. All trademarks in this material are the property of Castel. All rights reserved.