Product Code

9901/X97

Actuator Accessory
for 9700/RA6, 9720/RA2, 9720/RA6

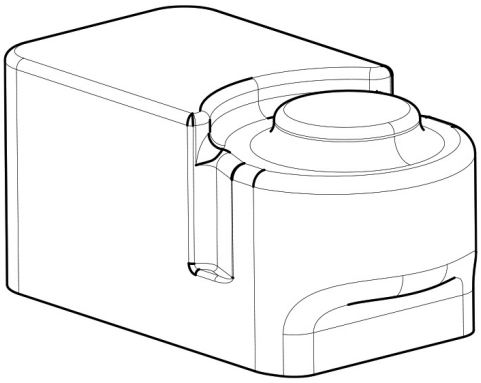

Product use

Auxiliary contacts are accessories to be used with servo motors. They are double-throw switches and can be set to any position between 0 and 90 degrees.
Their use allows remote the position of the motor and consequently that of the valve on which it is mounted.
With covers properly shaped on the servo motor profile, it is possible to protect them from the harmful effects of weather and water.
Made of durable materials, it ensures reliable operation and extends the life of the system: safety and durability in every operating environment.

Product Details

For actuator	9700/RA69720/RA29720/RA6
Package Pcs.	1

Notes where expressly stated

Castel non si assume alcuna responsabilità per eventuali errori nei cataloghi, opuscoli e altro materiale stampato o indicato nel sito Castel.it. Castel si riserva il diritto di modificare i propri prodotti senza preavviso. Tutti i marchi in questo materiale sono di proprietà di Castel. Tutti i diritti riservati.
Castel assumes no responsibility for any errors in catalogs, brochures and other material printed or indicated on the Castel.it website. Castel reserves the right to modify its products without notice. All trademarks in this material are the property of Castel. All rights reserved.