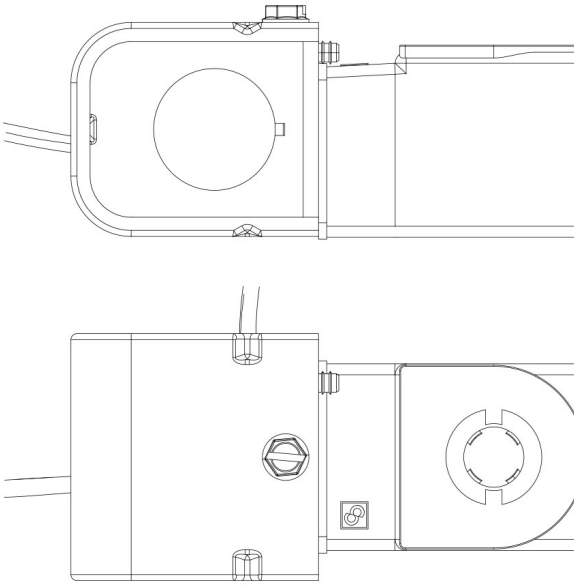

Product Code

9115/RA7

Bobina Tipo CM2 N2 240 Vac UL Recogn.
240V 60Hz

Product use

Coils with gear fixing systems, series 9120 and 9160.
Fast-on connections type DIN 43650/A for coils in series: 9120, 9160. Protection rating IP65; IP68 for series 9160 coils coupled with series 9155 connectors.
Available voltages; 24 VAC - 50/60 Hz, 110 VAC - 50/60 Hz, 220/230 VAC - 50/60 Hz, 240 VAC - 50/60 Hz, 380 VAC - 50/60 Hz, 12 VDC, 24 VDC, 27 VDC.
Connectors in series 9150, normalized DIN 43650, to wire, with IP65 protection rating. Connectors in series 9900, again normalized DIN 43650, pre-wired with various cable lengths, with IP65 protection rating. Connectors in series 9155, to wire, with IP65/68 protection rating.

Product Details

Coil Type (1)	CM2-N2
Voltage [V]	240
Frequency [Hz]	60
Power [W]	11
Connectors Type	Junction box NEMA 2153mm cables
Connectors Protection degree	~ IP 12-32
Package Pcs.	16

Notes where expressly stated

(1): coil with spare part G9150/R97 (yellow nut + black screw + OR)

Castel non si assume alcuna responsabilità per eventuali errori nei cataloghi, opuscoli e altro materiale stampato o indicato nel sito Castel.it. Castel si riserva il diritto di modificare i propri prodotti senza preavviso. Tutti i marchi in questo materiale sono di proprietà di Castel. Tutti i diritti riservati.
Castel assumes no responsibility for any errors in catalogs, brochures and other material printed or indicated on the Castel.it website. Castel reserves the right to modify its products without notice. All trademarks in this material are the property of Castel. All rights reserved.