Castel
Italian technology

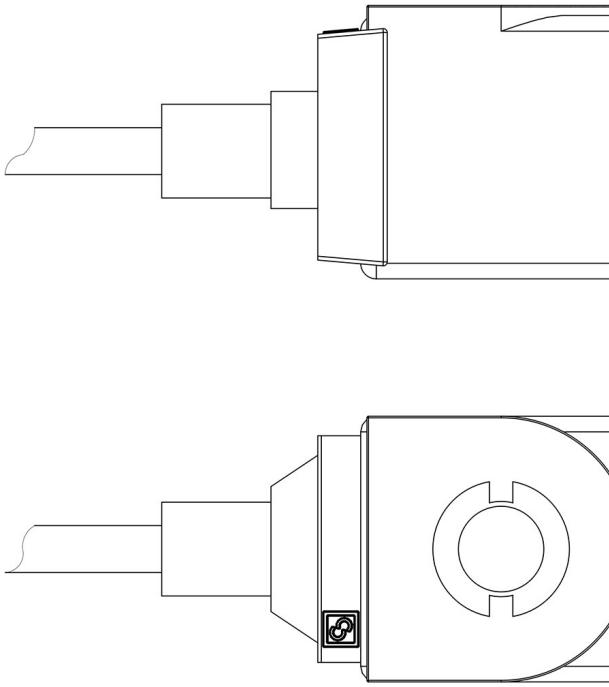

Product Code

9110/RA4

Coil Type CM2
110V 50/60Hz Cable Length=1m

POLYHEDRA

CLASSIC

Product use

Coils with the new ?FAST LOCK? fixing system, series 9300 and 9320, and coils with gear fixing systems, series 9110, 9120 and 9160.
Fast-on connections type DIN 43650/A for coils in series: 9120, 9160, 9300 and 9320; co-moulded cables for series 9110 coils. Protection rating IP65; IP68 for series 9160 coils coupled with series 9155 connectors.
Available voltages; 24 VAC - 50/60 Hz, 110 VAC - 50/60 Hz, 220/230 VAC - 50/60 Hz, 240 VAC - 50/60 Hz, 380 VAC - 50/60 Hz, 12 VDC, 24 VDC, 27 VDC, 48 VDC.
Connectors in series 9150, normalized DIN 43650, to wire, with IP65 protection rating. Connectors in series 9900, again normalized DIN 43650, pre-wired with various cable lengths, with IP65 protection rating.
Connectors in series 9155, to wire, with IP65/68 protection rating.

Product Details

Coil Type	CM2 (1)
Voltage [V]	110
Frequency [Hz]	50/60
Power [W]	8
Cable length [m]	1
Package Pcs.	8

Notes where expressly stated

Castel non si assume alcuna responsabilità per eventuali errori nei cataloghi, opuscoli e altro materiale stampato o indicato nel sito Castel.it. Castel si riserva il diritto di modificare i propri prodotti senza preavviso. Tutti i marchi in questo materiale sono di proprietà di Castel. Tutti i diritti riservati.
Castel assumes no responsibility for any errors in catalogs, brochures and other material printed or indicated on the Castel.it website. Castel reserves the right to modify its products without notice. All trademarks in this material are the property of Castel. All rights reserved.

(1) Coil with spare part G9150/R97 (yellow nut + black screw + OR)
(2) Use only with 9150/R45 connector / rectifier

Castel non si assume alcuna responsabilità per eventuali errori nei cataloghi, opuscoli e altro materiale stampato o indicato nel sito Castel.it. Castel si riserva il diritto di modificare i propri prodotti senza preavviso. Tutti i marchi in questo materiale sono di proprietà di Castel. Tutti i diritti riservati.
Castel assumes no responsibility for any errors in catalogs, brochures and other material printed or indicated on the Castel.it website. Castel reserves the right to modify its products without notice. All trademarks in this material are the property of Castel. All rights reserved.