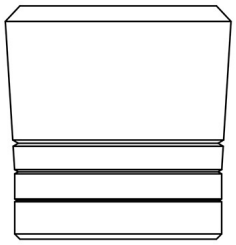

Product Code

9900/X91

Permanent Magnet

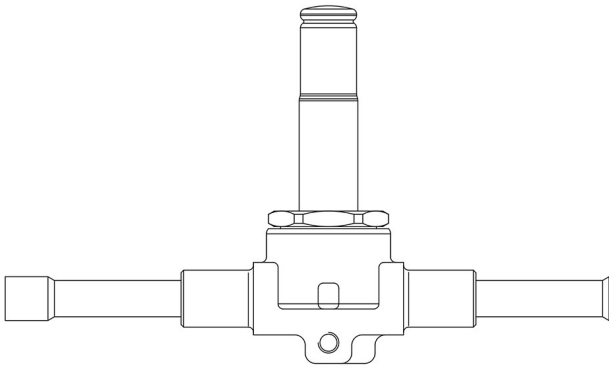

Product use

Magnetic tool part number 9900/X91 can be used on all Castel normally closed solenoid valves. Used during brazing of copper connections of the solenoid valve to the line piping allows the valve to be opened and for passage of the protective gas inside the valve. This avoids damage due to overheating of both the nucleus gasket and the membrane/piston gasket.

Product Details

Package pcs	1

Castel non si assume alcuna responsabilità per eventuali errori nei cataloghi, opuscoli e altro materiale stampato o indicato nel sito Castel.it. Castel si riserva il diritto di modificare i propri prodotti senza preavviso. Tutti i marchi in questo materiale sono di proprietà di Castel. Tutti i diritti riservati.
Castel assumes no responsibility for any errors in catalogs, brochures and other material printed or indicated on the Castel.it website. Castel reserves the right to modify its products without notice. All trademarks in this material are the property of Castel. All rights reserved.