Castel
Italian technology

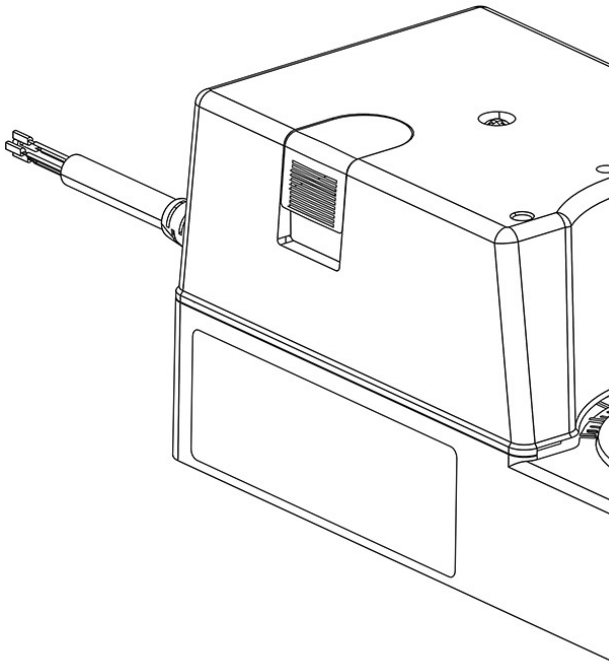

Product Code

9700/RA6

Electrical Actuator
10Nm 230V 50/60Hz

GO GREEN

POLYHEDRA

CLASSIC

Product use

Actuators can be assembled, using suitable flanged adaptors, to 2-ways ball valves and to manual 3-ways ball valves. They are assembled directly on the motorized 3-ways ball valves. Once this coupling has been performed, the valve can be opened or closed remotely. Alternatively, the actuator can be excluded and the valve can be operated manually.

Castel manufacturers actuator with a variety of operational characteristics: they are manufactured with a synthetic, self-extinguishing housing that covers the motor, the control and cut-out electronics based on the gear reducer torque and the self centring fixing system of the valve rod.
In the event of a power outage to the actuator, the gear reducer can be disengaged using the specific lever, to permit manual use of the valve.
Furthermore, auxiliary contacts for switching are available for remote control of the valve status.

Product Details

Voltage [V]	230
Frequency [Hz]	50/60
Power [W]	2,9
Degree of protection	IP 43
Rotation angle	90°

Castel non si assume alcuna responsabilità per eventuali errori nei cataloghi, opuscoli e altro materiale stampato o indicato nel sito Castel.it. Castel si riserva il diritto di modificare i propri prodotti senza preavviso. Tutti i marchi in questo materiale sono di proprietà di Castel. Tutti i diritti riservati.
Castel assumes no responsibility for any errors in catalogs, brochures and other material printed or indicated on the Castel.it website. Castel reserves the right to modify its products without notice. All trademarks in this material are the property of Castel. All rights reserved.

Torque [Nm]	10
Running time [sec]	60
Ambient temperature [°C] min.	-20
Ambient temperature [°C] max.	+50
Suitable for ball valve	see the couplings indicated in the COUPLING SCHEME table
Package Pcs.	1

Notes where expressly stated

(1): On-Off Input or proportional input (0÷10V)
(2): On-Off Input
(3): Proportional input (0-10V)
(4): UL homologated

Castel non si assume alcuna responsabilità per eventuali errori nei cataloghi, opuscoli e altro materiale stampato o indicato nel sito Castel.it. Castel si riserva il diritto di modificare i propri prodotti senza preavviso. Tutti i marchi in questo materiale sono di proprietà di Castel. Tutti i diritti riservati.
Castel assumes no responsibility for any errors in catalogs, brochures and other material printed or indicated on the Castel.it website. Castel reserves the right to modify its products without notice. All trademarks in this material are the property of Castel. All rights reserved.