Product Code

5690/X11

Oil Level Regulator Adapter
Flanged 3 holes D. 1.7/8"-4 holes D. 50
PS = 140 bar

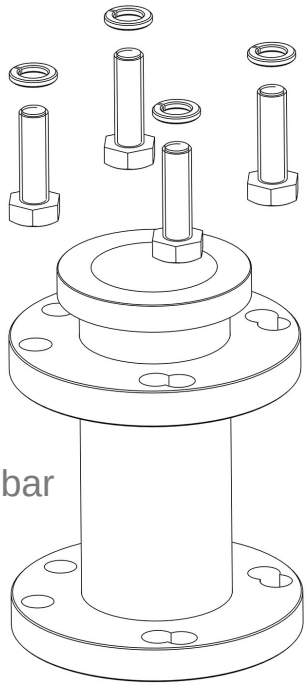

Product use

The oil level regulators ensure monitoring and control of the oil level in the crankcases of both alternative reciprocating and scroll compressors. Specifically, these regulators are employed to resolve the problem of incorrect oil distribution in multiple compressor plants.
Accessories for use with the following ASHRAE 34:2019 refrigerants, Class A1, A2L, or A3:
HCFC (R22)
HFC (R134A, R32, R404A, R407C, R410A, R507)
HFO (R1234YF, R1234ZE)
HFO + HFC (R448A, R449A, R450A, R452A, R452B, R454A, R454B, R454C, R455A, R513A, R515A, R515B)
HC (R290, R600, R600A, R1270)

Product Details

Compressor crankcase connect Flanged with 3 holes on dia 1.7/8" and 4 holes on dia 50 mmL = 83 mm

Package pcs	5

Notes where expressly stated

(1) including screws for fixing the adapter to the oil level regulator

Castel non si assume alcuna responsabilità per eventuali errori nei cataloghi, opuscoli e altro materiale stampato o indicato nel sito Castel.it. Castel si riserva il diritto di modificare i propri prodotti senza preavviso. Tutti i marchi in questo materiale sono di proprietà di Castel. Tutti i diritti riservati.
Castel assumes no responsibility for any errors in catalogs, brochures and other material printed or indicated on the Castel.it website. Castel reserves the right to modify its products without notice. All trademarks in this material are the property of Castel. All rights reserved.